FIRE METERS - OS & Y VALVES, GASKETS & METER					
(NEPTUNE MACH 10 Ultrasonic Meter)					
			METER w/ Strainer	TOTAL LENGTH	
SIZE	VALVES (2)	GASKETS (4)			
3" w/ 4" X 3" Reducer **	16"	1/2"	30" **	46 1/2"	
4"	18"	1/2"	27 1/2"	46"	
6"	21"	1/2"	33"	54 1/2"	
8"	23"	1/2"	30"	53 1/2"	
10"	26"	1/2"	41"	67 1/2"	
FIRE &/or Domestic Water SERVICE METERS - TEES, OS & Y VALVES, GASKETS & METERS					
(NEPTUNE MACH 10 Ultrasonic Meter)				Meter w/ Strainer	TOTAL LENGTH
SIZE	TEES (2)	VALVES (2)	GASKETS (6)		
3" w/ 4" X 3" Reducer **	3" X 3" - 22"	16"	3/4"	30" **	68 3/4"
4"	4" X 3" - 26"	18"	3/4"	27 1/2"	72 1/4"
6"	6" X 4" - 32"	21"	3/4"	33"	86 3/4"
8"	8" X 4" - 36"	23"	3/4"	30"	89 3/4"
10"	10" X 6" - 44"	26"	3/4"	41"	111 3/4"

2" MIN. TRAVEL

*All fittings, valves and meters are flanged & all dimensions are from face of flange to face of flange.

NOTE:
PLEASE NOTE THAT WATER METERS 3" AND LARGER ARE SUBJECT TO AN APPROXIMATE ORDER LEAD TIME OF 60 TO 75 BUSINESS DAYS AFTER FULL PAYMENT. PLEASE CONTACT CUSTOMER SERVICE AT 954-786-4637 TO ARRANGE FOR METER PROCUREMENT AND INSTALLATION. LARGE METERS MUST BE AT MINIMUM ORDERED PRIOR TO INITIAL INSPECTIONS.

ENGINEERING STANDARDS 2022

REVISIONS BY	DATE	ENGINEERING DIVISION CITY OF POMPANO BEACH	METER INSTALL DIMENSION LIST
T.W.	02-2008		DATE: JAN. 2022
S.S.	11-2016		DWG. NO.
A.S.	01-2022	SCALE: N.T.S.	106-4

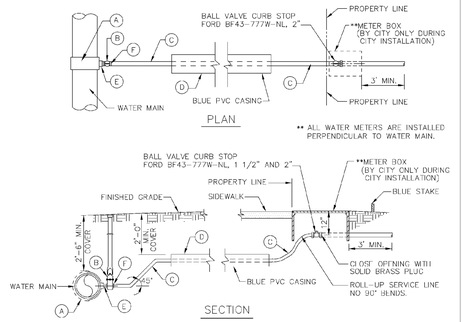

(A) 2" TAPPING SADDLE IRON PIPE THREADED FORD FC-202 OR EQUAL.
(B) 2" RESILIENT SEATED GATE VALVE CLOW F61-03 MUELLER A-23-60-8 2" OPERATING NUT BOXED TO GRADE – C.I. BOX
(C) 2" POLYETHYLENE BLUE
(D) 2 1/2" SCH. 40
(E) 2" X 3" BRASS NIPPLE
(F) 2" MIP COUPLING C-84-77 – PACK JOINT – CTS

TYPICAL 1 1/2" AND 2" WATER SERVICE

ENGINEERING STANDARDS 2022

REVISIONS BY	DATE	ENGINEERING DIVISION CITY OF POMPANO BEACH	TYPICAL 2" WATER SERVICE
S.S.	05-2011		DATE: APRIL 2022
S.S.	05-2012		DWG. NO.
S.S.	11-2018	SCALE: N.T.S.	107-2
A.S.	08-2021		

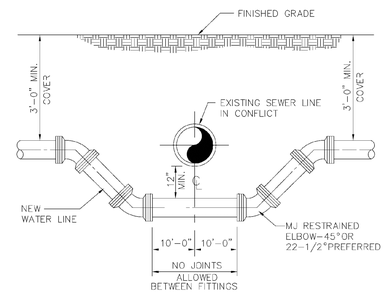

NOTES
WHERE CONDITIONS PERMIT, PIPE DEFLECTION MAY BE USED INSTEAD OF BENDS TO OBTAIN THE MINIMUM CLEARANCE. FACTORY OFFSETS MAY BE USED.

TYPICAL CONFLICT DETAIL

USE MEGALUGS AT ALL PIPE JOINTS

ALL D.I.P. TO BE PAINTED BLUE ON TOP HALF OF PIPE.

ENGINEERING STANDARDS 2022

REVISIONS BY	DATE	ENGINEERING DIVISION CITY OF POMPANO BEACH	TYPICAL CONFLICT (WATER)
S.S.	04-2005		DATE: MAY 2022
S.S.	01-2012		DWG. NO.
		SCALE: N.T.S.	108-1

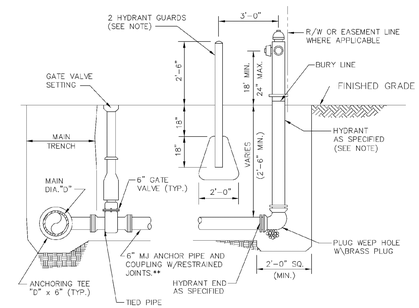

NOTES
HYDRANT GUARDS TO BE 6" DIAMETER GALVANIZED STEEL PIPE PAINTED YELLOW FILLED WITH CONCRETE. OMIT GUARDS IN LOCATIONS WHERE SIDEWALKS EXIST.

**USE 2 3/4" S.S. TIE RODS WHEN DISTANCE BETWEEN MAIN AND HYDRANT < 10'. TIE RODS WILL BE USED W/RESTRAINED JOINTS OR USE MEGALUGS AT ALL PIPE JOINTS

HYDRANTS INSTALLED ON EXISTING WATER MAINS MUST USE A MUELLER MJ DI TAPPING SLEEVE, H-615 OR APPROVED EQUAL.

HYDRANTS CONNECTED TO NEW MAINS SHALL BE CONNECTED USING A HYDRANT TEE.

ALL POMPANO BEACH HYDRANTS SHALL BE PAINTED RED.

TYPICAL FIRE HYDRANT ASSEMBLY

ENGINEERING STANDARDS 2022

REVISIONS BY	DATE	ENGINEERING DIVISION CITY OF POMPANO BEACH	FIRE HYDRANT ASSEMBLY
T.W.	11-2007		DATE: MAY 2022
T.W.	10-2010		DWG. NO.
S.S.	2-2012	SCALE: N.T.S.	109-1
S.S.	11-2012		

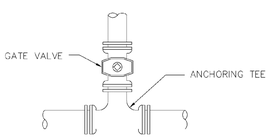

RESTRAINED VALVE AT TEE
(BRANCH)

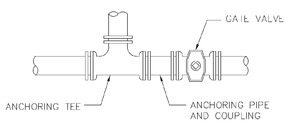

RESTRAINED VALVE AT TEE
(IN LINE)

USE MEGALUGS AT ALL PIPE JOINTS

ALL D.I.P. TO BE PAINTED BLUE ON THE TOP HALF OF PIPE.

ENGINEERING STANDARDS 2022

REVISIONS BY	DATE	ENGINEERING DIVISION CITY OF POMPANO BEACH	RESTRAINED VALVE AT TEE
S.S.	JUNE 2005		DATE: MAY 2022
			DWG. NO.
		SCALE: N.T.S.	111-1

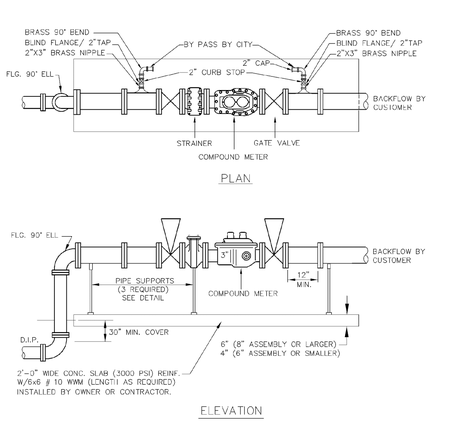

DOMESTIC SERVICE ONLY

PLEASE SEE METER INSTALL DIMENSION LIST ON STANDARD NO. 106-4

USE MEGALUGS AT ALL PIPE JOINTS

ENGINEERING STANDARDS 2022

REVISIONS BY	DATE	ENGINEERING DIVISION CITY OF POMPANO BEACH	DOMESTIC SERVICE ONLY
TCW	04-08		DATE: APRIL 2022
S.S.	01-2012		DWG. NO.
S.S.	11-2012	SCALE: N.T.S.	112-1

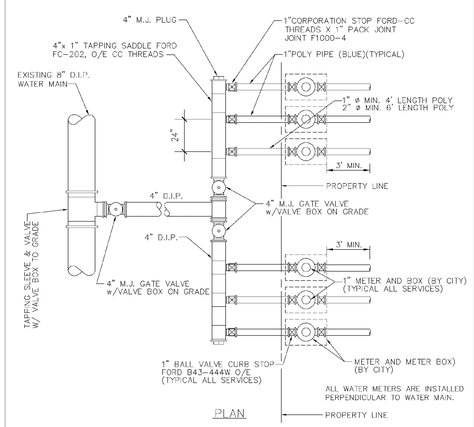

TYPICAL METER BANK

USE MEGALUGS AT ALL PIPE JOINTS

ALL D.I.P. TO BE PAINTED BLUE ON THE TOP HALF OF PIPE.

ENGINEERING STANDARDS 2022

REVISIONS BY	DATE	ENGINEERING DIVISION CITY OF POMPANO BEACH	TYPICAL METER BANK
TCW	02-09		DATE: MAY 2022
S.S.	05-2011		DWG. NO.
S.S.	11-2012	SCALE: N.T.S.	113-1

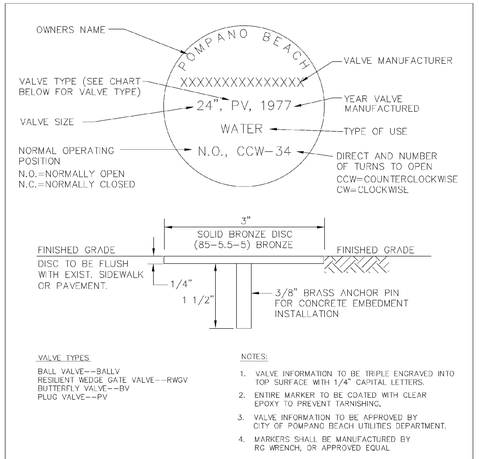

VALVE TYPES
BALL VALVE--BALLV
RESILIENT WEDGE GATE VALVE---RWGV
BUTTERFLY VALVE---BV
PLUG VALVE--PV

NOTES:
1. VALVE INFORMATION TO BE TRIPLE ENGRAVED INTO TOP SURFACE WITH 1/4" CAPITAL LETTERS.
2. ENTIRE MARKER TO BE COATED WITH CLEAR EPOXY TO PREVENT TARNISHING.
3. VALVE INFORMATION TO BE APPROVED BY CITY OF POMPANO BEACH UTILITIES DEPARTMENT.
4. MARKERS SHALL BE MANUFACTURED BY RG WRENCH, OR APPROVED EQUAL

UNDERGROUND VALVE IDENTIFICATION MARKER

ENGINEERING STANDARDS 2022

REVISIONS BY	DATE	ENGINEERING DIVISION CITY OF POMPANO BEACH	UNDERGROUND VALVE IDENTIFICATION MARKER
S.S.	JUNE 2005		DATE: FEB. 2022
T.W.	11-2007		DWG. NO.
T.W.	02-2008	SCALE: N.T.S.	115-1
S.S.	1-24-12		

AAC
PZ22-12000008
11/01/2022

KEITH
301 East Atlantic Blvd.
Pompano Beach, FL 33060
PH: (954) 788-3400
Florida Engineering Business License: CA7928
Florida Surveyor and Mapper Business License: LB6860
Florida Landscape Architecture Business License: LC26000457

REVISIONS

NO.	DESCRIPTION	DATE

ISSUE DATE:	09/21/2022
DESIGNED BY:	JW
DRAWN BY:	FA/NW
CHECKED BY:	TD
BID-CONTRACT:	

This item has been digitally signed and sealed by Thomas F. Donahue, P.E. on the date below using a Digital Signature.

THOMAS F. DONAHUE LICENSE No. 60529 STATE OF FLORIDA PROFESSIONAL ENGINEER

Printed copies of this document are not considered signed and sealed and the signature must be verified on any electronic copies.

2022.09.30 15:58:34-04'00'

THOMAS F. DONAHUE, P.E.
FLORIDA REG. NO. 60529
(FOR THE FIRM)

CLIENT
US GATEWAY INVESTMENTS LLC

PROJECT
GATEWAY LUXURY APARTMENTS
950 N. Powerline Road
Pompano Beach, FL

SHEET TITLE
WATER AND SEWER DETAILS

SHEET NUMBER CU-502

PROJECT NUMBER 12697.00

STATUS: PRELIMINARY

Plotted by: fascuntar On 9/30/2022 3:08 PM

Drawing name: T:\12697.00 - Powerline Road Pompano Beach - Multi Family Residence - US Gateway Investments\Engineering\Cad\12697.00-CU-5XX.dwg